ZONE	REV.	REVISION DESCRIPTION	ECN NO.	DATE
	K	RE-DRAWN; REMOVED "B" & "M" FROM LOGIC SECT., "09" FROM DIFF. SECT., & FINISH CODES 0, 1 ,3, 5, 7, 8, ADDED; TO DIFF. SECT. "04" & "07", AND ∅ TO DIM. .660 MAX.: D.P.	ECO-165189	22-MAY-2017

Property of Sensata Technologies

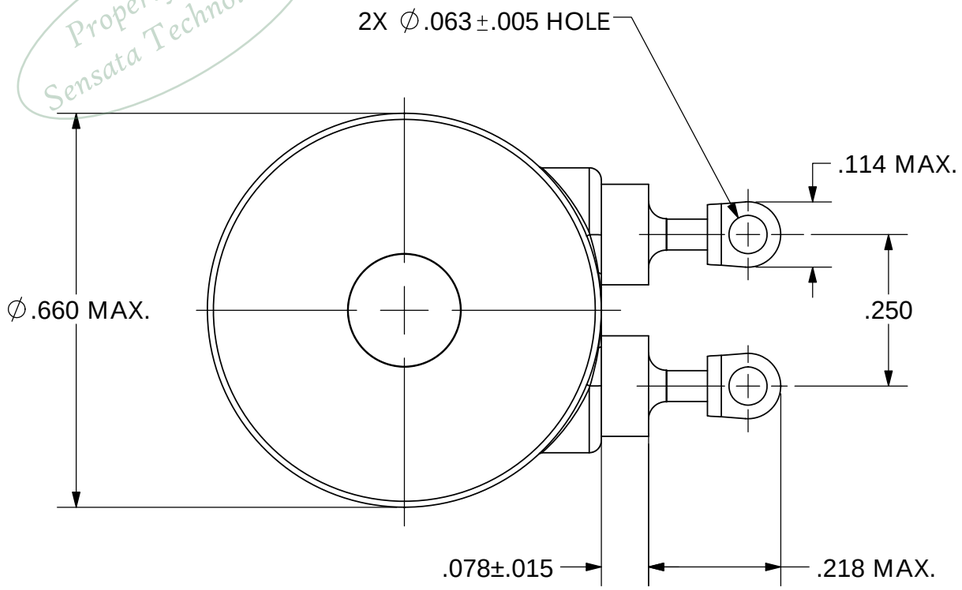

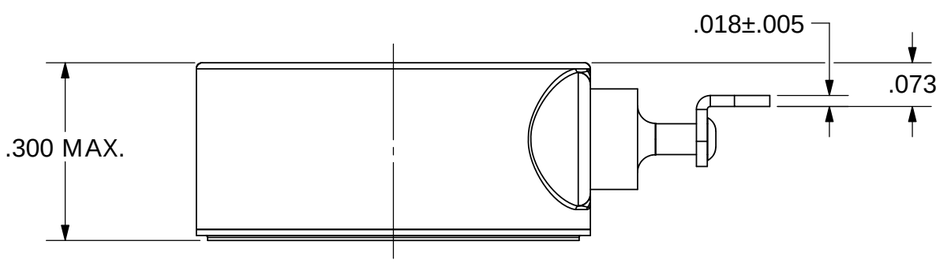

COMPLETE PART NUMBER FOR STANDARD TYPE M2 THERMOSTAT CONTAIN FOURTEEN CHARACTERS WITH SIGNIFICANT INDICATED BELOW.

M211□ □□□ □□ □□ □ □

L = OPEN ON TEMPERATURE RISE + °F
F = CLOSE ON TEMPERATURE RISE + °F

CLOSING TEMPERATURE: °F (USE 3 DIGITS)

PLUS AND MINUS TOLERANCE FOR CLOSING TEMPERATURE
"03" = ±3°F
"04" = ±4°F
"05" = ±5°F

DIFFERENTIAL:
"04" INDICATES 2° TO 4° F DIFFERENTIAL
"05" INDICATES 2° TO 5° F DIFFERENTIAL
"07" INDICATES 3° TO 7° F DIFFERENTIAL

CODE	FINISH
2	COPPER NICKEL
4	TIN PLATE
6	COPPER PLATE

CODE	CONTACTS
1	FINE SILVER
2	GOLD PLATED FINE SILVER

FOR REFERENCE ONLY, CHECK LATEST REVISION BEFORE USE.
PARTS MADE TO THIS PRINT MUST CONFORM TO E9898 REV. E.

DRAWN H.E. SHAW
DATE 30-JUN-1961

ENGINEER J.D.
DATE 30-JUN-1961

APPROVED
DATE

APPROVED
DATE

SENSATA TECHNOLOGIES PROPRIETARY AND CONFIDENTIAL. NEITHER THIS PRINT NOR THE INFORMATION CONTAINED HEREON IS TO BE USED AGAINST THE INTERESTS OF SENSATA TECHNOLOGIES OR AGAINST THE INTERESTS OF ANY OF ITS AFFILIATED COMPANIES OR WHOLLY OWNED SUBSIDIARIES.

INTERPRET DIMENSIONING AND TOLERANCING PER ASME Y14.5-2009. UNLESS OTHERWISE SPECIFIED DIMENSIONS ARE IN INCHES.
TOLERANCES
DECIMALS X.XXX ± .010
ANGLES

DO NOT SCALE DRAWING

THIRD ANGLE PROJECTION

Sensata Technologies
529 PLEASANT STREET
P.O. BOX 2964
ATTLEBORO, MA 02703

TITLE
M211 STYLE THERMOSTAT
SPST AUTO RESET SEALED
NARROW DIFFERENTIAL
ENVELOPE DRAWING

SIZE	DWG NO.	REV.
B	M211	K

SCALE 4:1 | SOLIDWORKS | SHEET 1 OF 1

DEVICE: SPST

PROJECT: